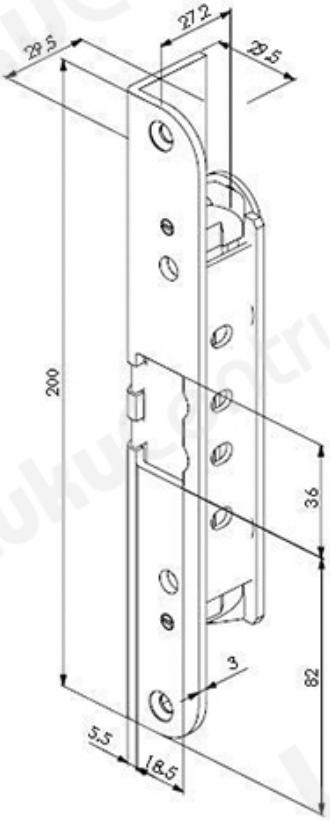TOOTENIMETUS	SOODUS	HIND
Compatibility: [illegible], LC120, LC190, LE153, LC734, LE735, LC735, LC204, LC290, LC291, LE180, LE184, LE185	29.65 ?	29.65 ?
Rebated stoker plate, ABLOY LC734, Fe/Zn (screws)