TOOTENIMETUS	SOODUS	HIND
ÐºÐ¾Ð¼Ð¿Ð»ÐµÐºÑ‚ Ð¼Ð°Ñ‚Ð¾Ð²Ð«Ð ASSA 2256-18 Ð¼Ð¼ ÐºÐ¾Ð»Ñ?Ñ?Ð¾ (Ð±Ð»ÐµÑ•Ñ?Ñ•Ñ?Ð¸Ð¹ Ñ Ñ?Ð¾Ð¼)	42.58 ?	53.22 ?
ÐºÐ¾Ð¼Ð¿Ð»ÐµÐºÑ‚ Ð½Ð°ÐºÐ»Ð°Ð´Ð¾Ð´ ASSA 2256-18 Ð¼Ð¼ ÐºÐ¾Ð»Ñ?Ñ?Ð¾ (Ð¼Ð°Ñ?Ð¾Ð²Ñ?Ð¹ Ñ Ñ?Ð¾Ð¼)	47.29 ?	59.11 ?
ÐºÐ¾Ð¼Ð¿Ð»ÐµÐºÑ‚ Ð½Ð°ÐºÐ»Ð°Ð´Ð¾Ð´ ASSA 2256-18 Ð¼Ð¼ ÐºÐ¾Ð»Ñ?Ñ?Ð¾ (Ñ?Ñ?Ñ?Ð½Ñ?Ð¹/mirus)	58.56 ?	73.20 ?

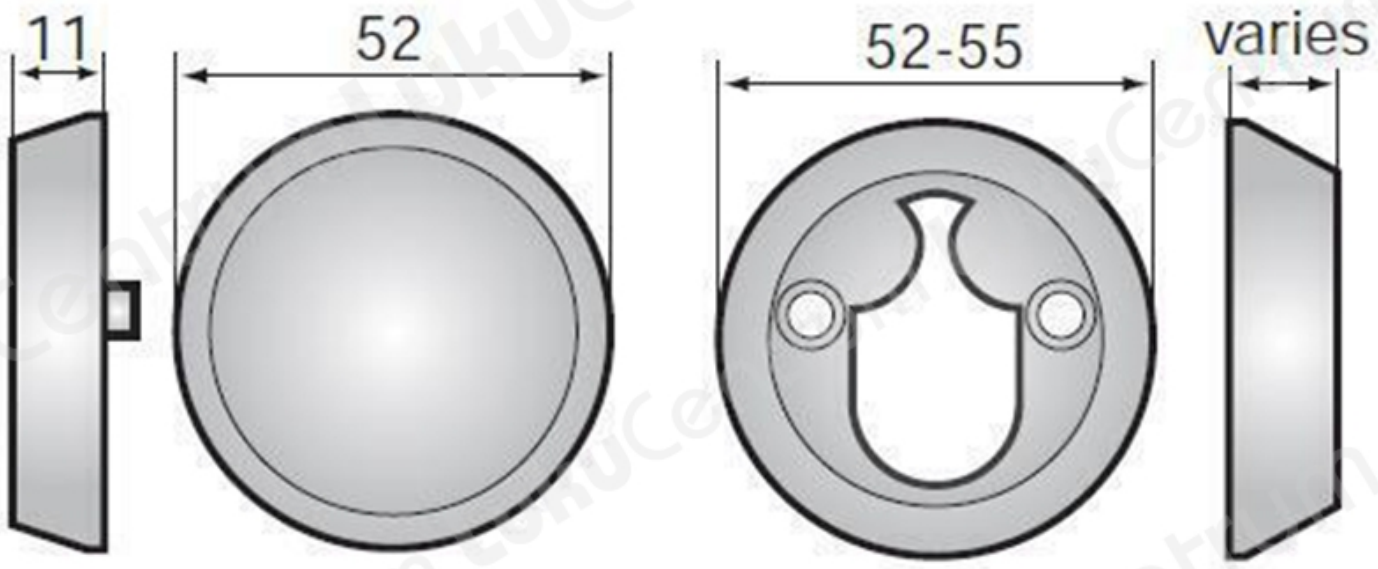

2256

Blind rose outside, cylinder ring inside