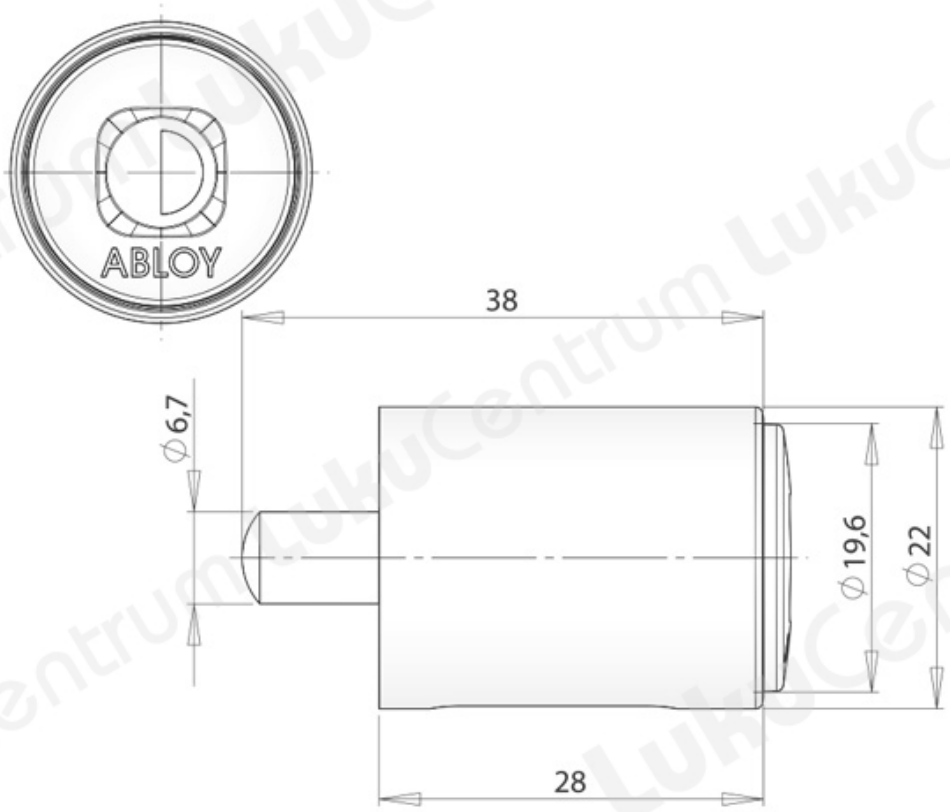TOOTENIMETUS	SOODUS	HIND
[illegible] be mastered with door lock cylinders Ð?Ð°Ð¼Ð¾Ð° Ñ• Ð½Ð°Ð¶Ð¼Ð½Ð¾Ð¾Ð¼ Ð·Ð°Ñ?ÐµÐ»ÐºÐ¾Ð¾Ð¼ ABLOY OF423C Classic (c 2 ÐºÐ»Ñ?Ñ?Ð°Ð¼Ð¸)		51.80 ?