TOOTENIMETUS	SOODUS	HIND
[illegible] Alloy EL402 Ñ• [illegible]		379.40 ?
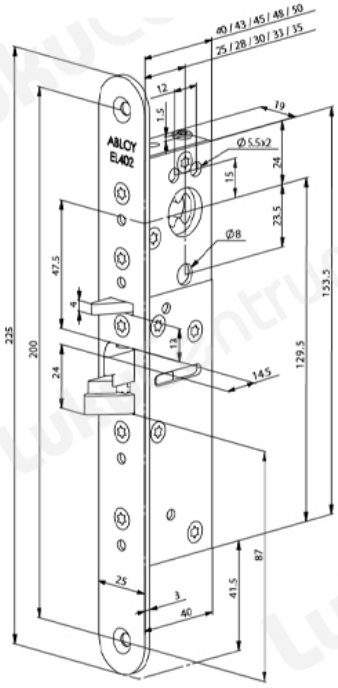
[illegible] applications in public and educational buildings. The locks include a special double action bolt for quick and easy use and offer a cost-effective way of electric locking without compromising performance. The locks can be controlled by a variety of electrical impulse generating equipment such as card readers, keypads and timers. The locks can be connected to automatic