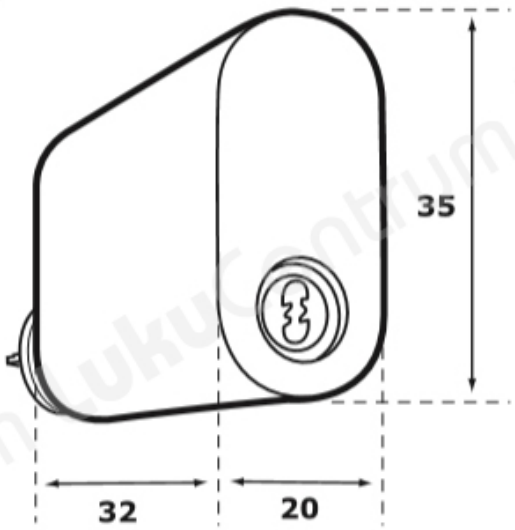| TOOTENIMETUS | SOODUS | HIND |
|---|---|---|
| Ð¦Ð¸Ð¼Ð¼ÐµÑ?ÑŒÐ½Ñ?Ñ•Ñ?Ð¸Ð¹ Ñ Ñ?Ð¾Ð¼, c 3 ÐºÐ»Ñ?Ñ?Ð°Ð¼Ð¸) | 67.90 ? | 84.88 ? |
| Ð¦Ð¸Ð¼Ð¼ÐµÑ?ÑŒÐ½Ñ?Ñ•Ñ?Ð¸Ð¹ Ñ Ñ?Ð¾Ð¼, Ð±ÐµÐ· ÐºÐ»Ñ?Ñ?ÐµÐ¹) | | 45.19 ? |
| Ð¦Ð¸Ð¼Ð¼ÐµÑ?ÑŒÐ½Ñ? ABLOY CY201U Novel HCR (Ð¼Ð°Ñ?Ð¾Ð²Ñ?Ð¹ Ñ Ñ?Ð¾Ð¼, c 3 ÐºÐ»Ñ?Ñ?Ð°Ð¼Ð¸) | 74.79 ? | 93.49 ? |
| Ð¦Ð¸Ð¼Ð¼ÐµÑ?ÑŒÐ½Ñ? ABLOY CY201U Novel HCR (Ð¼Ð°Ñ?Ð¾Ð²Ñ?Ð¹ Ñ Ñ?Ð¾Ð¼, Ð±ÐµÐ· ÐºÐ»Ñ?Ñ?ÐµÐ¹) | | 49.67 ? |
| Ð¦Ð¸Ð¼Ð¼ÐµÑ?ÑŒÐ½Ñ? ABLOY CY201U Novel MS/HaLa (Ð¼Ð°Ñ?Ð¾Ð²Ð°Ñ• Ð»Ð°Ñ?Ñ?Ð½Ñ?, c 3 ÐºÐ»Ñ?Ñ?Ð°Ð¼Ð¸) | 81.55 ? | 101.94 ? |
| Ð¦Ð¸Ð¼Ð¼ÐµÑ?ÑŒÐ½Ñ? ABLOY CY201U Novel MS/HaLa (Ð¼Ð°Ñ?Ð¾Ð²Ð°Ñ• Ð»Ð°Ñ?Ñ?Ð½Ñ?, Ð±ÐµÐ· ÐºÐ»Ñ?Ñ?ÐµÐ¹) | | 52.67 ? |
| Ð¦Ð¸Ð¼Ð¼ÐµÑ?ÑŒÐ½Ñ? ABLOY CY201U Novel NiHa (Ð¼Ð°Ñ?Ð¾Ð²Ñ?Ð¹ Ð½Ð¸ÐºÐµÐ»Ñ?, c 3 ÐºÐ»Ñ?Ñ?Ð°Ð¼Ð¸) | 78.14 ? | 97.67 ? |
| Ð¦Ð¸Ð¼Ð¼ÐµÑ?ÑŒÐ½Ñ? ABLOY CY201U Novel NiHa (Ð¼Ð°Ñ?Ð¾Ð²Ñ?Ð¹ Ð½Ð¸ÐºÐµÐ»Ñ?, Ð±ÐµÐ· ÐºÐ»Ñ?Ñ?ÐµÐ¹) | | 51.96 ? |