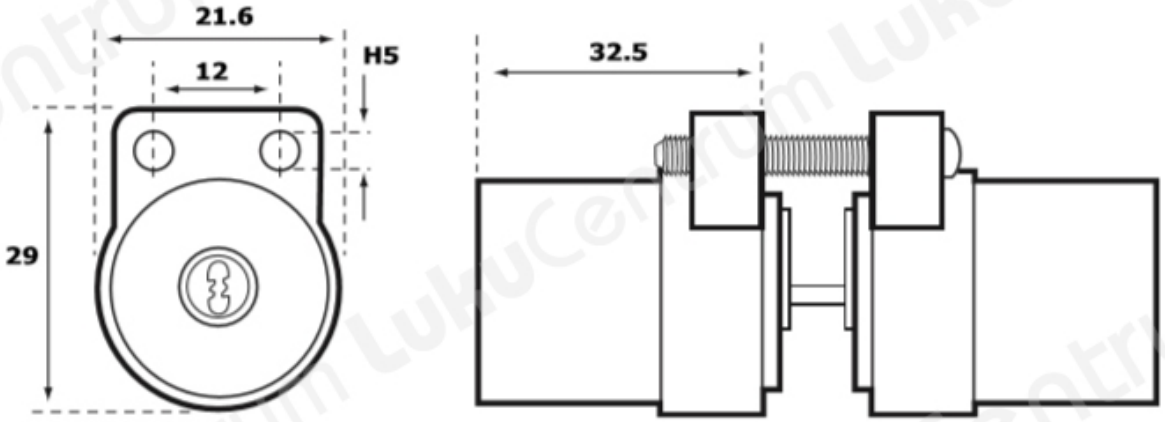TOOTENIMETUS	SOODUS	HIND
Ð¦Ð¸Ð¸Ð½Ð´Ñ? ABLOY CY059U Novel CR (Ð±Ð»ÐµÑ•Ñ?Ñ•Ñ?Ð¸Ð¹ Ñ Ñ?Ð¾Ð¼, c 3 ÐºÐ»Ñ?Ñ?Ð°Ð¼Ð¸)		112.58 ?
Ð¦Ð¸Ð¸Ð½Ð´Ñ? ABLOY CY059U Novel CR (Ð±Ð»ÐµÑ•Ñ?Ñ•Ñ?Ð¸Ð¹ Ñ Ñ?Ð¾Ð¼, Ð±ÐµÐ· ÐºÐ»Ñ?Ñ?ÐµÐ¹)		79.14 ?
Ð¦Ð¸Ð»Ð¸Ð½Ð´Ñ? ABLOY CY059U Novel Ms/KiLa (Ð¿Ð¾Ð»Ð¸Ñ?Ð¾Ð²Ð°Ð½Ð½Ð°Ñ• Ð¼Ð°Ñ?Ñ?Ð½Ñ?, Ð±ÐµÐ· ÐºÐ»Ñ?Ñ?ÐµÐ¹)		104.96 ?
Ð¦Ð¸Ð»Ð¸Ð½Ð´Ñ? ABLOY CY059U Novel NiHa (Ð¼Ð°Ñ?Ð¾Ð²Ñ?Ð¹ Ð½Ð¸ÐºÐµÐ»Ñ?, c 3 ÐºÐ»Ñ?Ñ?Ð°Ð¼Ð¸)		131.98 ?
Ð¦Ð¸Ð»Ð¸Ð½Ð´Ñ? ABLOY CY059U Novel NiHa (Ð¼Ð°Ñ?Ð¾Ð²Ñ?Ð¹ Ð½Ð¸ÐºÐµÐ»Ñ?, Ð±ÐµÐ· ÐºÐ»Ñ?Ñ?ÐµÐ¹)		92.23 ?