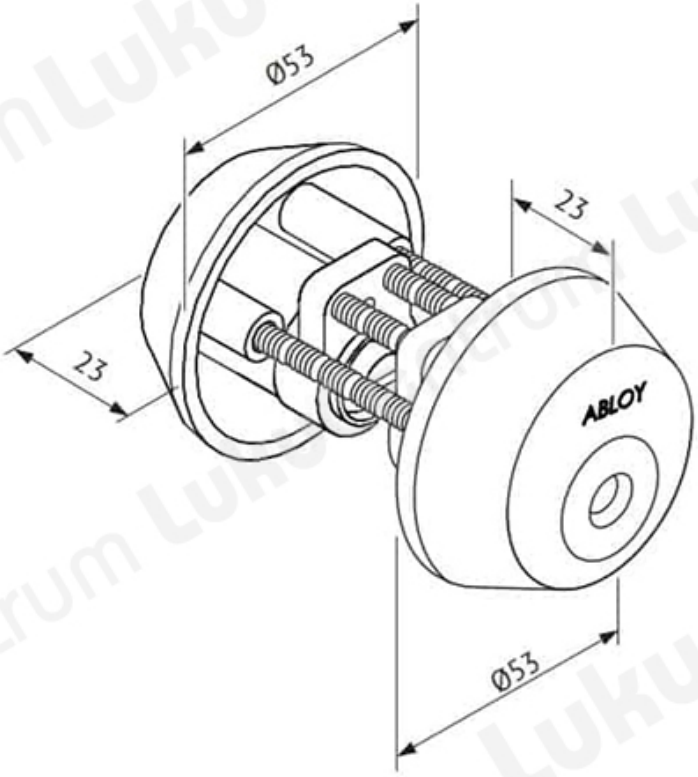TOOTENIMETUS	SOODUS	HIND
Ð¦Ð¸Ð¸Ð½Ð´Ñ? ABLOY CY029U Novel CR (Ð±Ð»ÐµÑ•Ñ?Ñ•Ñ?Ð¸Ð¹ Ñ Ñ?Ð¾Ð¼, c 3 ÐºÐ»Ñ?Ñ?Ð°Ð¼Ð¸)		200.91 ?
Ð¦Ð¸Ð¸Ð½Ð´Ñ? ABLOY CY029U Novel CR (Ð±Ð»ÐµÑ•Ñ?Ñ•Ñ?Ð¸Ð¹ Ñ Ñ?Ð¾Ð¼, Ð±ÐµÐ· ÐºÐ»Ñ?Ñ?ÐµÐ¹)		149.07 ?
Ð¦Ð¸Ð»Ð¸Ð½Ð´Ñ? ABLOY CY029U Novel HCR (Ð¼Ð°Ñ?Ð¾Ð²Ñ?Ð¹ Ñ Ñ?Ð¾Ð¼, c 3 ÐºÐ»Ñ?Ñ?Ð°Ð¼Ð¸)		221.08 ?
Ð¦Ð¸Ð»Ð¸Ð½Ð´Ñ? ABLOY CY029U Novel HCR (Ð¼Ð°Ñ?Ð¾Ð²Ñ?Ð¹ Ñ Ñ?Ð¾Ð¼, Ð±ÐµÐ· ÐºÐ»Ñ?Ñ?ÐµÐ¹)		163.88 ?
Ð¦Ð¸Ð»Ð¸Ð½Ð´Ñ? ABLOY CY029U Novel NiHa (Ð¼Ð°Ñ?Ð¾Ð²Ñ?Ð¹ Ð½Ð¸ÐºÐµÐ»Ñ?, c 3 ÐºÐ»Ñ?Ñ?Ð°Ð¼Ð¸)		226.63 ?