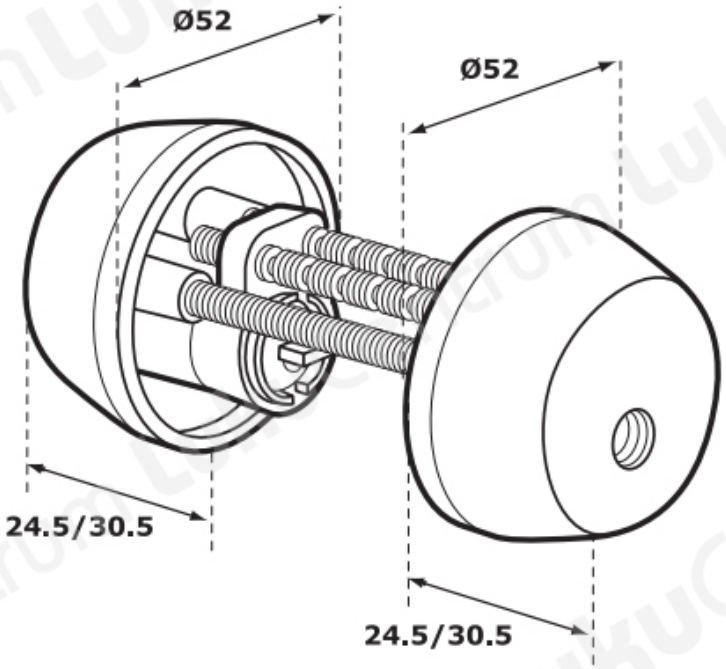TOOTENIMETUS	SOODUS	HIND
Ð¦Ð¸Ð¸Ð½Ð´Ñ? ABLOY CY002U Novel CR (Ð±Ð»ÐµÑ•Ñ?Ñ•Ñ?Ð¸Ð¹ Ñ Ñ?Ð¾Ð¼, c 3 ÐºÐ»Ñ?Ñ?Ð°Ð¼Ð¸)		197.12 ?
Ð¦Ð¸Ð¸Ð½Ð´Ñ? ABLOY CY002U Novel CR (Ð±Ð»ÐµÑ•Ñ?Ñ•Ñ?Ð¸Ð¹ Ñ Ñ?Ð¾Ð¼, Ð±ÐµÐ· ÐºÐ»Ñ?Ñ?ÐµÐ¹)		146.18 ?
Ð¦Ð¸Ð»Ð¸Ð½Ð´Ñ? ABLOY CY002U Novel HCR (Ð¼Ð°Ñ?Ð¾Ð²Ñ?Ð¹ Ñ Ñ?Ð¾Ð¼, c 3 ÐºÐ»Ñ?Ñ?Ð°Ð¼Ð¸)		216.82 ?
Ð¦Ð¸Ð»Ð¸Ð½Ð´Ñ? ABLOY CY002U Novel HCR (Ð¼Ð°Ñ?Ð¾Ð²Ñ?Ð¹ Ñ Ñ?Ð¾Ð¼, Ð±ÐµÐ· ÐºÐ»Ñ?Ñ?ÐµÐ¹)		160.82 ?
Ð¦Ð¸Ð»Ð¸Ð½Ð´Ñ? ABLOY CY002U Novel MS/HaLa (Ð¼Ð°Ñ?Ð¾Ð²Ð°Ñ• Ð»Ð°Ñ?Ñ?Ð½Ñ?, c 3 ÐºÐ»Ñ?Ñ?Ð°Ð¼Ð¸)		241.05 ?
Ð¦Ð¸Ð¸Ð½Ð´Ñ? ABLOY CY002U Novel NiHa (Ð¼Ð°Ñ?Ð¾Ð²Ñ?Ð¹ Ð½Ð¸ÐºÐµÐ»Ñ?, c 3 ÐºÐ»Ñ?Ñ?Ð°Ð¼Ð¸)		231.08 ?
Ð¦Ð¸Ð¸Ð½Ð´Ñ? ABLOY CY002U Novel NiHa (Ð¼Ð°Ñ?Ð¾Ð²Ñ?Ð¹ Ð½Ð¸ÐºÐµÐ»Ñ?, Ð±ÐµÐ· ÐºÐ»Ñ?Ñ?ÐµÐ¹)		178.28 ?