- ABLOY standardized cylinder locks are available in different models and dimensions to suit a wide range of applications.
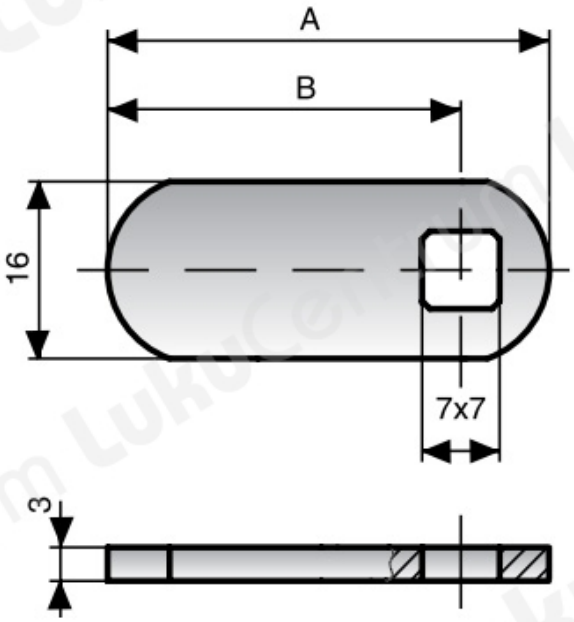
TOOTENIMETUS	SOODUS	HIND
Ð?Ð¿Ñ?Ñ•Ð¼Ð¾Ð¹ Ñ?Ð¸Ð³ÐµÐ»Ñ? ABLOY 455608 (A=26 Ð¼Ð¼, B=18 Ð¼Ð¼)		5.31 ?
Ð?Ð¿Ñ?Ñ•Ð¼Ð¾Ð¹ Ñ?Ð¸Ð³ÐµÐ»Ñ? ABLOY 434815 (A=30,5 Ð¼Ð¼, B=22,5 Ð¼Ð¼)		3.51 ?
Ð?Ð¿Ñ?Ñ•Ð¼Ð¾Ð¹ Ñ?Ð¸Ð³ÐµÐ»Ñ? ABLOY 434869 (A=33 Ð¼Ð¼, B=25 Ð¼Ð¼)		3.71 ?
Ð?Ð¿Ñ?Ñ•Ð¼Ð¾Ð¹ Ñ?Ð¸Ð³ÐµÐ»Ñ? ABLOY 455322 (A=35 Ð¼Ð¼, B=27 Ð¼Ð¼)		3.75 ?
Ð?Ð¿Ñ?Ñ•Ð¼Ð¾Ð¹ Ñ?Ð¸Ð³ÐµÐ»Ñ? ABLOY 434609 (A=38 Ð¼Ð¼, B=30 Ð¼Ð¼)		4.48 ?
Ð?Ð¿Ñ?Ñ•Ð¼Ð¾Ð¹ Ñ?Ð¸Ð³ÐµÐ»Ñ? ABLOY 434794 (A=40 Ð¼Ð¼, B=32 Ð¼Ð¼)		2.37 ?
Ð?Ð¿Ñ?Ñ•Ð¼Ð¾Ð¹ Ñ?Ð¸Ð³ÐµÐ»Ñ? ABLOY 455556 (A=45 Ð¼Ð¼, B=37 Ð¼Ð¼)		3.49 ?
Ð?Ð¿Ñ?Ñ•Ð¼Ð¾Ð¹ Ñ?Ð¸Ð³ÐµÐ»Ñ? ABLOY 455548 (A=48 Ð¼Ð¼, B=40 Ð¼Ð¼)		1.68 ?
Ð?Ð¿Ñ?Ñ•Ð¼Ð¾Ð¹ Ñ?Ð¸Ð³ÐµÐ»Ñ? ABLOY 455494 (A=53 Ð¼Ð¼, B=45 Ð¼Ð¼)		3.11 ?
Ð?Ð¿Ñ?Ñ•Ð¼Ð¾Ð¹ Ñ?Ð¸Ð³ÐµÐ»Ñ? ABLOY 455797 (A=58 Ð¼Ð¼, B=50 Ð¼Ð¼)		2.83 ?
Ð?Ð¿Ñ?Ñ•Ð¼Ð¾Ð¹ Ñ?Ð¸Ð³ÐµÐ»Ñ? ABLOY 455606 (A=68 Ð¼Ð¼, B=60 Ð¼Ð¼)		2.99 ?