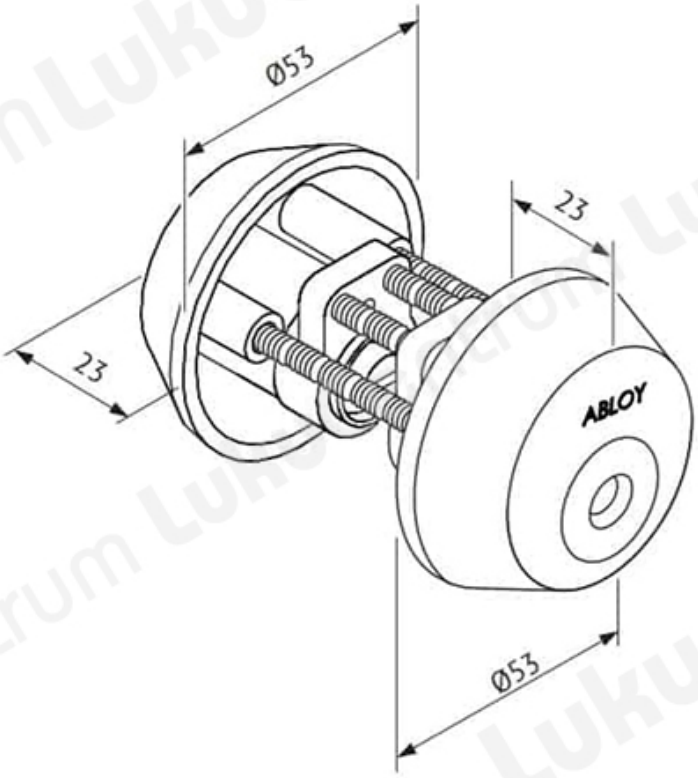TOOTENIMETUS	SOODUS	HIND
Cylinder ABLOY CY029T Protec2 CR (bright chrome, w 3 keys)		326.91 €
Cylinder ABLOY CY029T Protec2 CR (bright chrome, w/o keys)		248.89 €
Cylinder ABLOY CY029T Protec2 HCR (brushed chrome, w 3 keys)		359.52 €
Cylinder ABLOY CY029T Protec2 HCR (brushed chrome, w/o keys)		281.61 €
Cylinder ABLOY CY029T Protec2 NiHa (brushed nickel, w 3 keys)		375.86 €
Cylinder ABLOY CY029T Protec2 NiHa (brushed nickel, w/o keys)		287.37 €