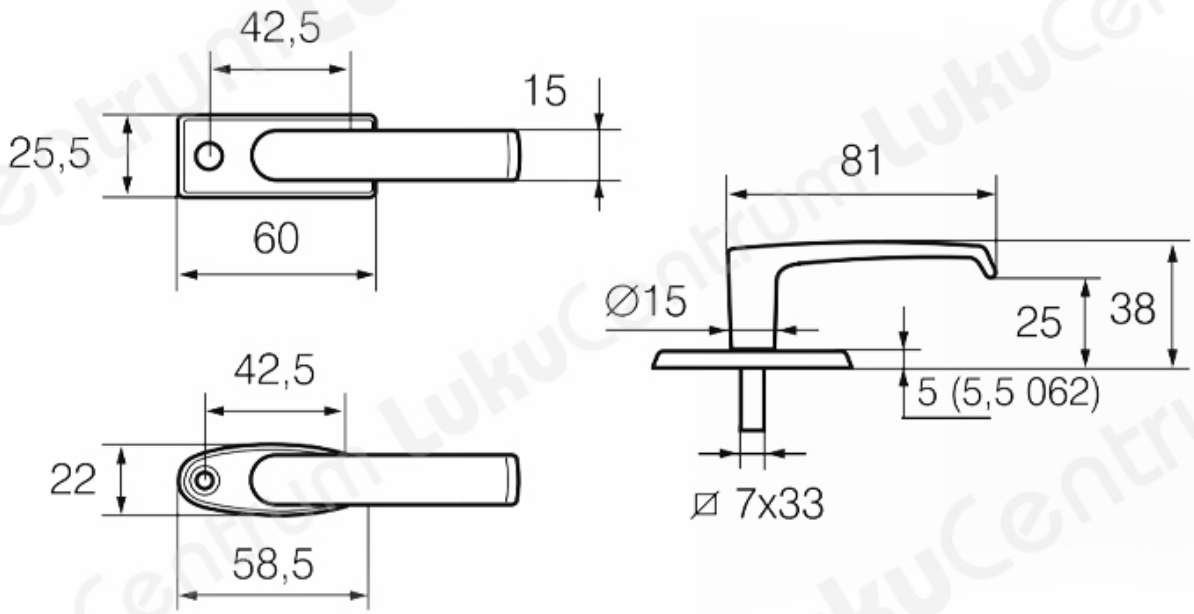TOOTENIMETUS	SOODUS	HIND
Ð?ÐºÐ¾Ð½Ð½Ð°Ñ• Ñ?Ñ?Ñ?ÐºÐ° ABLOY PRIME 55/152 Ms/CR (Ð±Ð»ÐµÑ•Ñ?Ñ•Ñ?Ð¸Ð¹ Ñ Ñ?Ð¾Ð¼)		22.13 ?
Ð?ÐºÐ¾Ð½Ð½Ð°Ñ• Ñ?Ñ?Ñ?ÐºÐ° ABLOY PRIME 55/152 Zn/CR (Ð±Ð»ÐµÑ•Ñ?Ñ•Ñ?Ð¸Ð¹ Ñ Ñ?Ð¾Ð¼, Ð±ÐµÐ· Ð²Ð¸Ð½Ñ?Ð¾Ð²)		9.62 ?
Ð?ÐºÐ¾Ð½Ð½Ð°Ñ• Ñ?Ñ?Ñ?ÐºÐ° ABLOY PRIME 55/152 Zn/CR (Ð±Ð»ÐµÑ•Ñ?Ñ•Ñ?Ð¸Ð¹ Ñ Ñ?Ð¾Ð¼, 16-20 Ð¼Ð¼, Ð±ÐµÐ· Ð²Ð¸Ð½Ñ?Ð¾Ð²)		11.86 ?
Ð?ÐºÐ¾Ð½Ð½Ð°Ñ• Ñ?Ñ?Ñ?ÐºÐ° ABLOY PRIME 55/152 Zn/CR (Ð±Ð»ÐµÑ•Ñ?Ñ•Ñ?Ð¸Ð¹ Ñ Ñ?Ð¾Ð¼, 16-33 Ð¼Ð¼, Ð±ÐµÐ· Ð²Ð¸Ð½Ñ?Ð¾Ð²)		11.22 ?
Ð?ÐºÐ¾Ð½Ð½Ð°Ñ• Ñ?Ñ?Ñ?ÐºÐ° ABLOY PRIME 55/152 Zn/CR (Ð±Ð»ÐµÑ•Ñ?Ñ•Ñ?Ð¸Ð¹ Ñ Ñ?Ð¾Ð¼)		11.69 ?
Ð?ÐºÐ¾Ð½Ð½Ð°Ñ• Ñ?Ñ?Ñ?ÐºÐ° ABLOY PRIME 55/152 Ms/HCR (Ð¼Ð°Ñ?Ð¾Ð²Ñ?Ð¹ Ñ Ñ?Ð¾Ð¼)		24.32 ?
Ð?ÐºÐ¾Ð½Ð½Ð°Ñ• Ñ?Ñ?Ñ?ÐºÐ° ABLOY PRIME 55/152 Ms/KiLa (Ð¿Ð¾Ð»Ð¸Ñ?Ð¾Ð²Ð°Ð½Ð½Ð°Ñ• Ð»Ð°Ñ?Ñ?Ð½Ñ?)		23.70 ?
Ð?ÐºÐ¾Ð½Ð½Ð°Ñ• Ñ?Ñ?Ñ?ÐºÐ° ABLOY PRIME 55/152 Ms/HaLa (Ð»Ð°Ñ?Ñ?Ð½Ñ? Ð¾Ð±Ñ?Ð°Ð±Ð¾Ñ?Ð°Ð½Ð½Ñ?Ð¹ Ñ?Ñ?Ñ?ÐºÐ¾Ð¼Ð¹)		24.51 ?
Ð?ÐºÐ¾Ð½Ð½Ð°Ñ• Ñ?Ñ?Ñ?ÐºÐ° ABLOY PRIME 55/152 Zn/VAL (Ð±ÐµÐ»Ñ?Ð¹ RAL 9010, Ð±ÐµÐ· Ð²Ð¸Ð½Ñ?Ð¾Ð²)		11.33 ?
Ð?ÐºÐ¾Ð½Ð½Ð°Ñ• Ñ?Ñ?Ñ?ÐºÐ° ABLOY PRIME 55/152 Zn/VAL (Ð±ÐµÐ»Ñ?Ð¹ RAL 9010)		14.29 ?