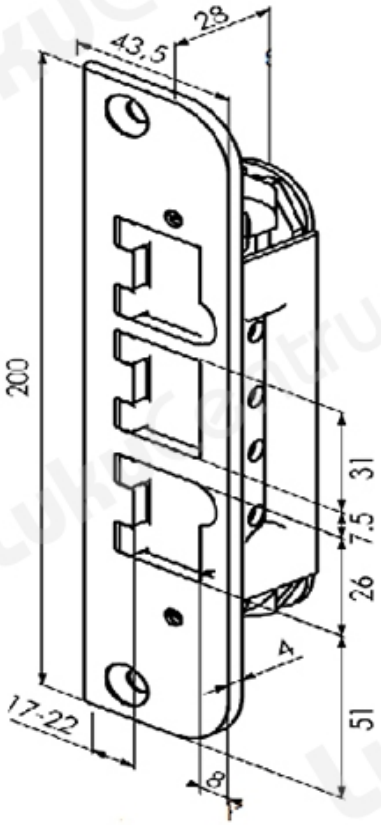TOOTENIMETUS	SOODUS	HIND
[illegible]		
Striker plate ABLOY LP718 / ASSA 1487-12 Fe/ZL	29.65 ?	29.65 ?