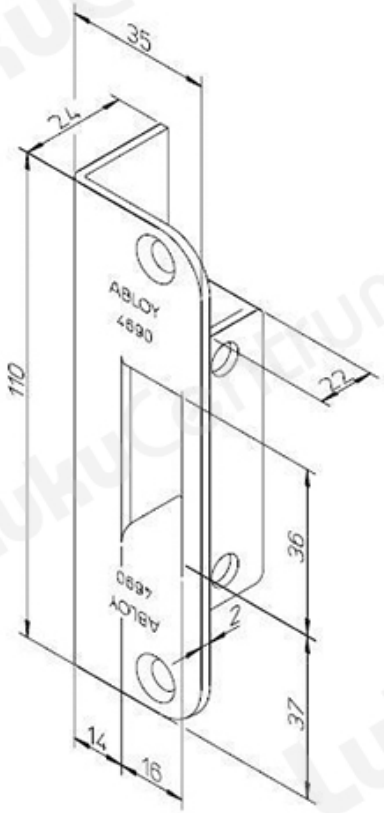TOOTENIMETUS	SOODUS	HIND
[illegible]		
Striker plate ABLOY 4690 Fe/ZL (Flush door)	4.71 ?	4.71 ?