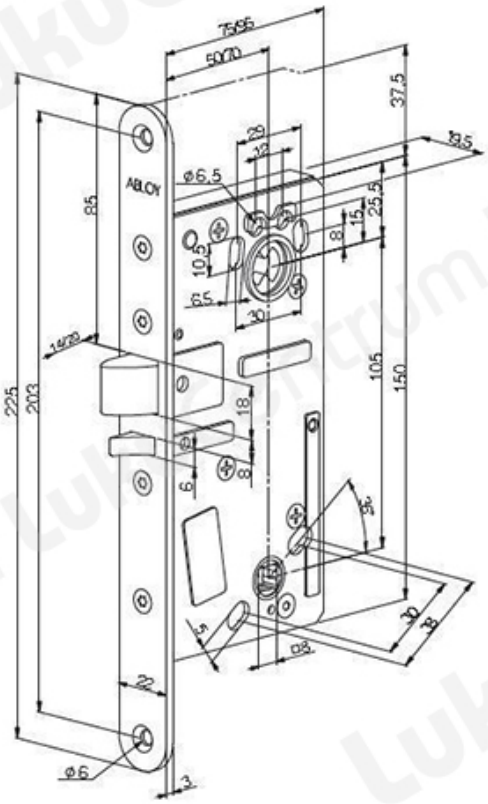TOOTENIMETUS	SOODUS	HIND
[illegible]		[illegible]
Solenoidlukk Abloy EL582/50 mm		520.54 ?
Solenoidlukk Abloy EL582/70 mm		551.24 ?