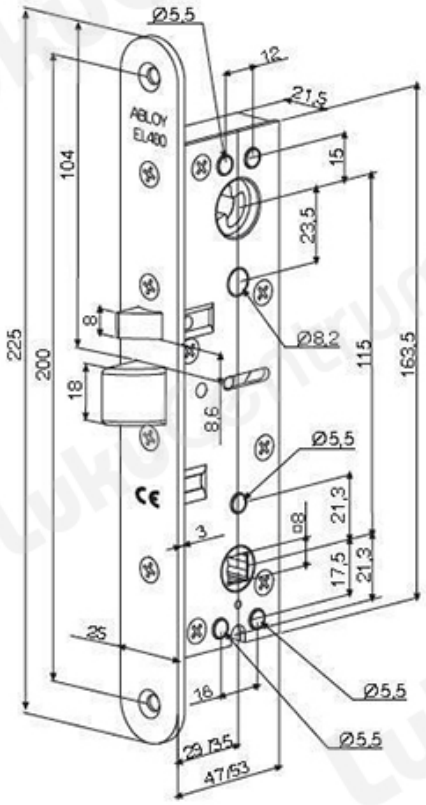TOOTENIMETUS	SOODUS	HIND
Solenoid lock Abloy EL482/35 (front plate 25 mm)		624.73 ?
Solenoid lock Abloy EL482/29 (front plate 25 mm)		624.74 ?