TOOTENIMETUS	SOODUS	HIND
[illegible]	[illegible]	[illegible]

Sale [illegible] (without striker plate) 71147 ?
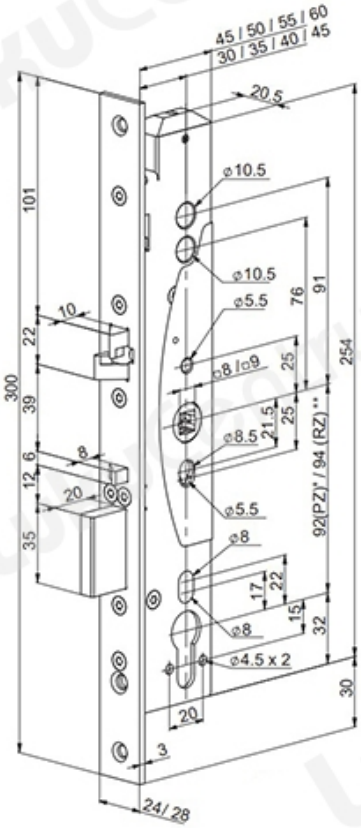
Since [illegible] locks can be electrically controlled by access control system or by a remote control system such as timer, keypad or push button.