TOOTENIMETUS	SOODUS	HIND
[illegible]		[illegible]
Solenoid lock Abloy EL460/30 (without a striker plate)		711.54 ?
Solenoid lock Abloy EL460/35 (without a striker plate)		711.53 ?
Solenoid lock Abloy EL460/40 (without a striker plate)		711.33 ?
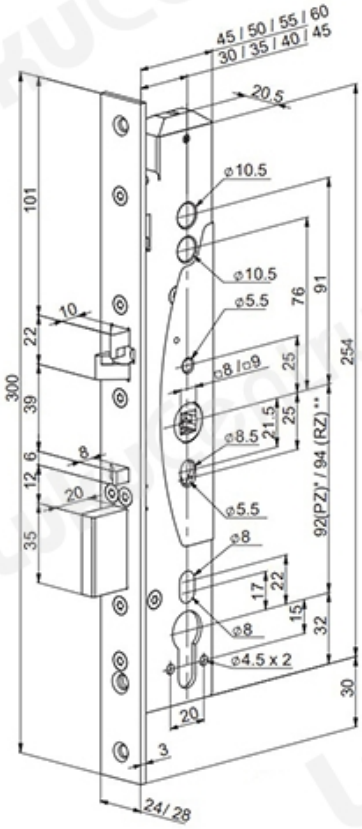
[illegible] structural parts of Abloy locks are always physically controlled by access control system or by a remote control system such as timer, keypad or push button.