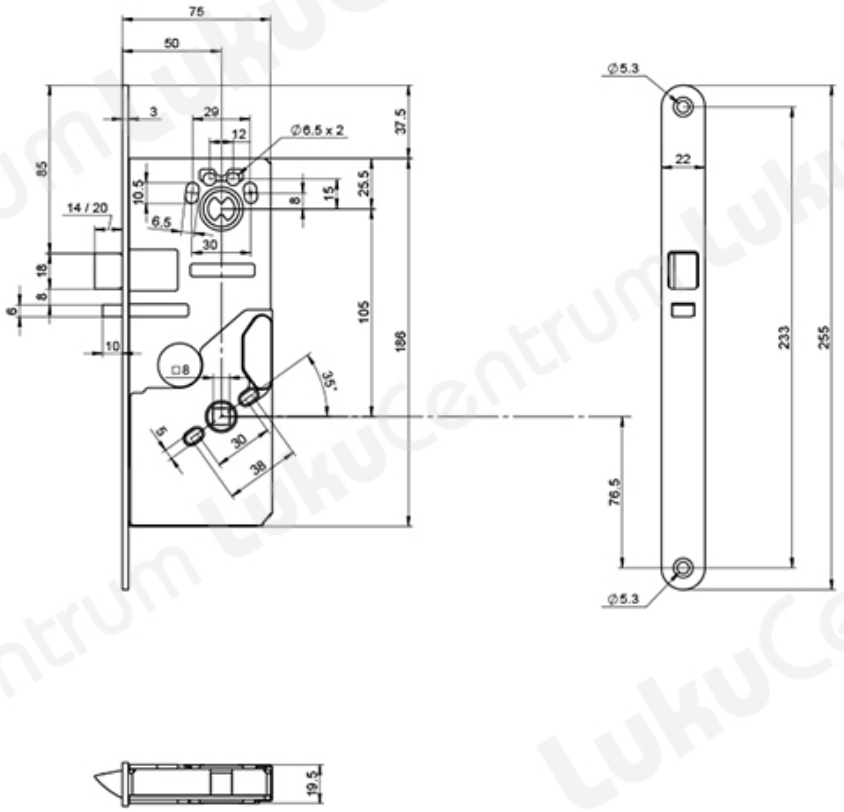TOOTENIMETUS	SOODUS	HIND
Motorlock Abloy PE590 (right hand, with mechanical spindle) (when ordering specify handedness and mechanical spindle length) (with suitable hardware) cable)		1322.85 ?