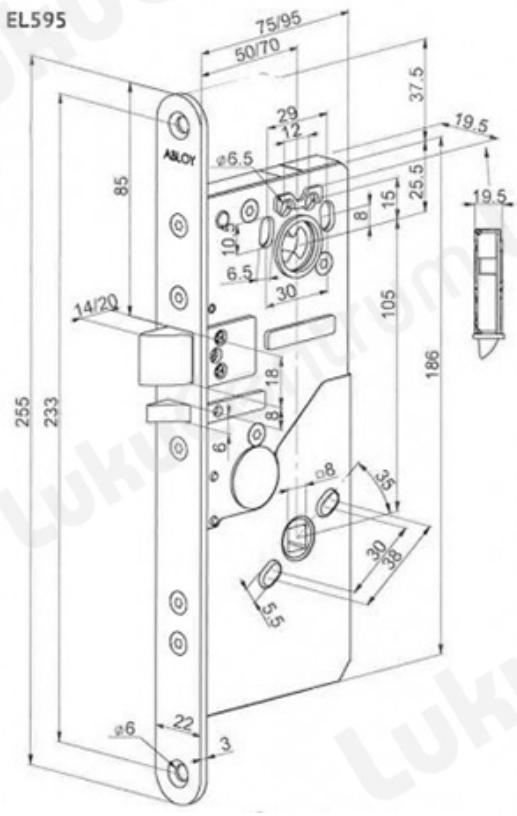TOOTENIMETUS	SOODUS	HIND
Motor lock Abloy EL595FL (handle deactivated in power off) The inside door handle is electrically controlled and the door will be locked if any kind of input is triggered.		1296,36 €