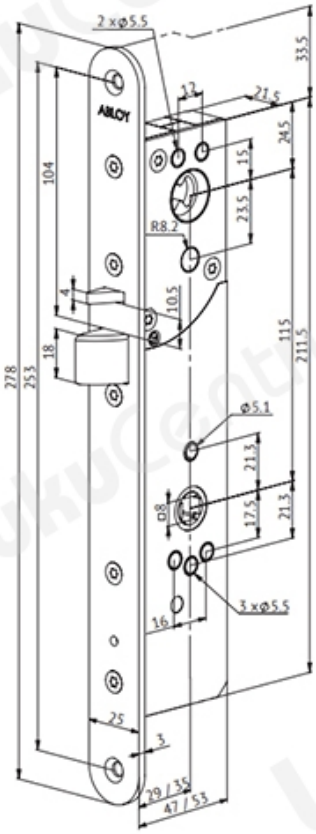TOOTENIMETUS	SOODUS	HIND
[illegible]	[illegible]	[illegible]
Motorlock Abloy EL495FU/30 mm (handle activated in power off)	[illegible]	1396.05 ?
Motor lock Abloy EL495FU/35 mm (handle activated in power off)		1402.82 ?