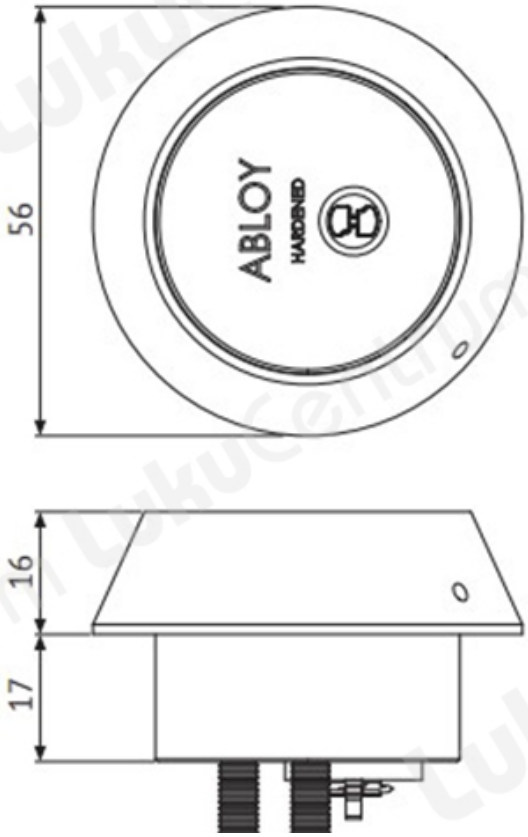TOOTENIMETUS	SOODUS	HIND
• **Disadvantages** double cylinder in applications where extra high security is required on wooden doors.		
Ð¦Ð¸Ð»Ð¸Ð½Ð´Ñ? ABLOY CY203U Novel CR (Ð±Ð»ÐµÑ•Ñ?Ñ•Ñ?Ð¸Ð¹ Ñ Ñ?Ð¾Ð¼, c 3 ÐºÐ»Ñ?Ñ?Ð°Ð¼Ð¸)		162.17 ?
Ð¦Ð¸Ð»Ð¸Ð½Ð´Ñ? ABLOY CY203U Novel CR (Ð±Ð»ÐµÑ•Ñ?Ñ•Ñ?Ð¸Ð¹ Ñ Ñ?Ð¾Ð¼, Ð±ÐµÐ· ÐºÐ»Ñ?Ñ?ÐµÐ¹)		118.84 ?
Ð¦Ð¸Ð»Ð¸Ð½Ð´Ñ? ABLOY CY203U Novel HCR (Ð¼Ð°Ñ?Ð¾Ð²Ñ?Ð¹ Ñ Ñ?Ð¾Ð¼, c 3 ÐºÐ»Ñ?Ñ?Ð°Ð¼Ð¸)		181.10 ?
Ð¦Ð¸Ð»Ð¸Ð½Ð´Ñ? ABLOY CY203U Novel HCR (Ð¼Ð°Ñ?Ð¾Ð²Ñ?Ð¹ Ñ Ñ?Ð¾Ð¼, Ð±ÐµÐ· ÐºÐ»Ñ?Ñ?ÐµÐ¹)		128.87 ?