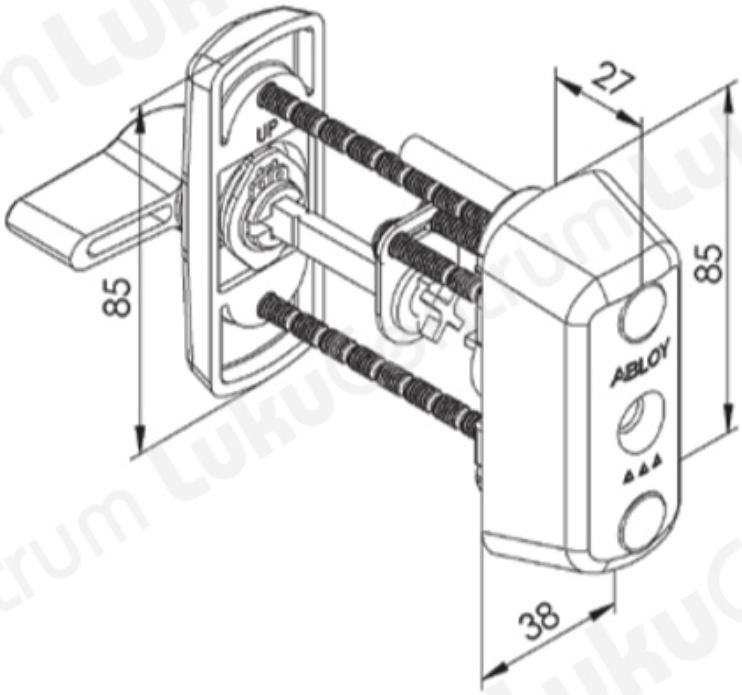TOOTENIMETUS	SOODUS	HIND
Ð¦Ð¸Ð¸Ð½Ð´Ñ? ABLOY CY066T Protec2 CR (Ð±Ð»ÐµÑ•Ñ?Ñ•Ñ?Ð¸Ð¹ Ñ Ñ?Ð¾Ð¼, c 3 ÐºÐ»Ñ?Ñ?Ð°Ð¼Ð¸)		215.16 ?
Ð¦Ð¸Ð¸Ð½Ð´Ñ? ABLOY CY066T Protec2 CR (Ð±Ð»ÐµÑ•Ñ?Ñ•Ñ?Ð¸Ð¹ Ñ Ñ?Ð¾Ð¼, Ð±ÐµÐ· ÐºÐ»Ñ?Ñ?ÐµÐ¹)		157.81 ?
Ð¦Ð¸Ð»Ð¸Ð½Ð´Ñ? ABLOY CY066T Protec2 HCR (Ð¼Ð°Ñ?Ð¾Ð²Ñ?Ð¹ Ñ Ñ?Ð¾Ð¼, c 3 ÐºÐ»Ñ?Ñ?Ð°Ð¼Ð¸)		236.74 ?
Ð¦Ð¸Ð»Ð¸Ð½Ð´Ñ? ABLOY CY066T Protec2 HCR (Ð¼Ð°Ñ?Ð¾Ð²Ñ?Ð¹ Ñ Ñ?Ð¾Ð¼, Ð±ÐµÐ· ÐºÐ»Ñ?Ñ?ÐµÐ¹)		173.95 ?
Ð¦Ð¸Ð»Ð¸Ð½Ð´Ñ? ABLOY CY066T Protec2 NiHa (Ð¼Ð°Ñ?Ð¾Ð²Ñ?Ð¹ Ð½Ð¸ÐºÐµÐ»Ñ?, c 3 ÐºÐ»Ñ?Ñ?Ð°Ð¼Ð¸)		247.46 ?
Ð¦Ð¸Ð»Ð¸Ð½Ð´Ñ? ABLOY CY066T Protec2 NiHa (Ð¼Ð°Ñ?Ð¾Ð²Ñ?Ð¹ Ð½Ð¸ÐºÐµÐ»Ñ?, Ð±ÐµÐ· ÐºÐ»Ñ?Ñ?ÐµÐ¹)		172.35 ?