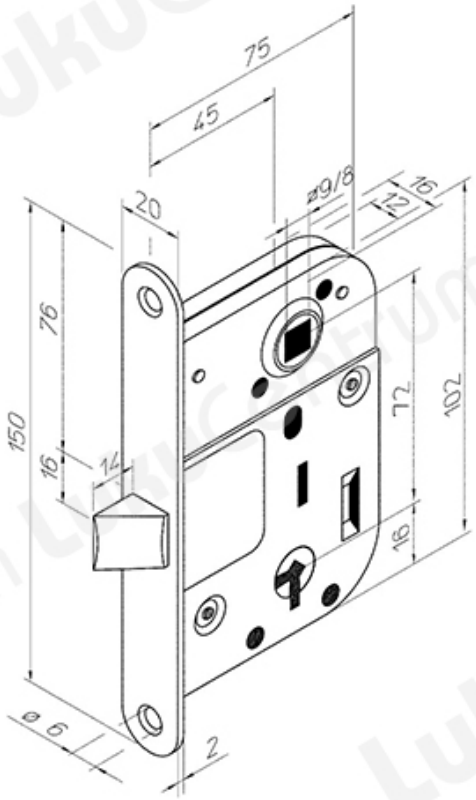TOOTENIMETUS	SOODUS	HIND
Lock case ABLOY/FAS/ASSA 2020 JME (handedness is universal)	36.16 ?	41.33 ?
Lock case ABLOY/FAS/ASSA 2020 ZN (handedness is universal)	36.16 ?	41.33 ?