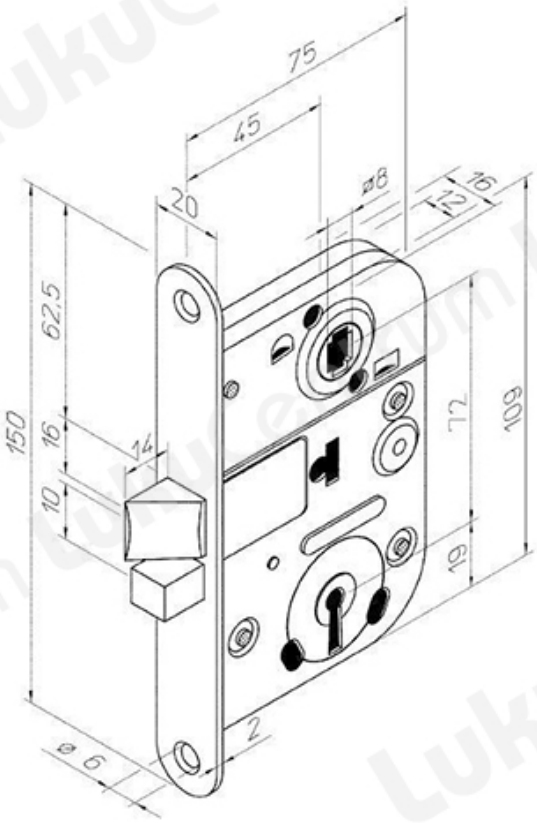TOOTENIMETUS	SOODUS	HIND
Lock case ABLOY 2011 JME (handedness is universal)	40.21 ?	45.95 ?
Lock case ABLOY 2011 ZN (handedness is universal)	40.21 ?	45.95 ?