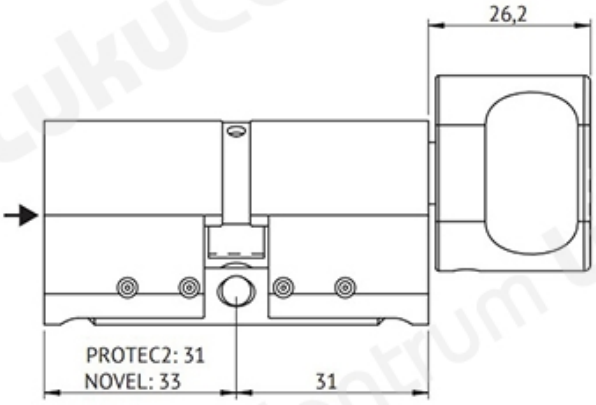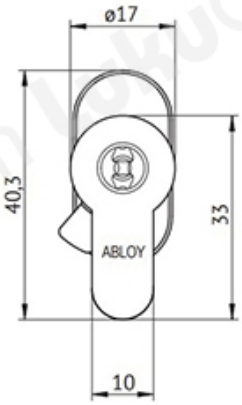| TOOTENIMETUS | SOODUS | HIND |
|---|---|---|
| EURO lukusÃ¼damik ABLOY CY323U Novel CR (lÃ¤ikiv kroom, 3 vÃµtmega) | | 135.07 ? |
| EURO lukusÃ¼damik ABLOY CY323U Novel CR (lÃ¤ikiv kroom, vÃµtmeteta) | | 88.16 ? |
| EURO lukusÃ¼damik ABLOY CY323U Novel HCR (mattkroom, 3 vÃµtmega) | | 148.56 ? |
| EURO lukusÃ¼damik ABLOY CY323U Novel HCR (mattkroom, vÃµtmeteta) | | 96.90 ? |
| EURO lukusÃ¼damik ABLOY CY323U Novel Ms/KiLa (poleeritud messing, 3 vÃµtmega) | | 166.77 ? |
| EURO lukusÃ¼damik ABLOY CY323U Novel MS/HaLa (harjatud messing, 3 vÃµtmega) | | 166.77 ? |
| EURO lukusÃ¼damik ABLOY CY323U Novel MS/HaLa (harjatud messing, vÃµtmeteta) | | 117.32 ? |
| EURO lukusÃ¼damik ABLOY CY323U Novel NiHa (harjatud nikkel, 3 vÃµtmega) | | 158.32 ? |
| EURO lukusÃ¼damik ABLOY CY323U Novel NiHa (harjatud nikkel, vÃµtmeteta) | | 103.32 ? |