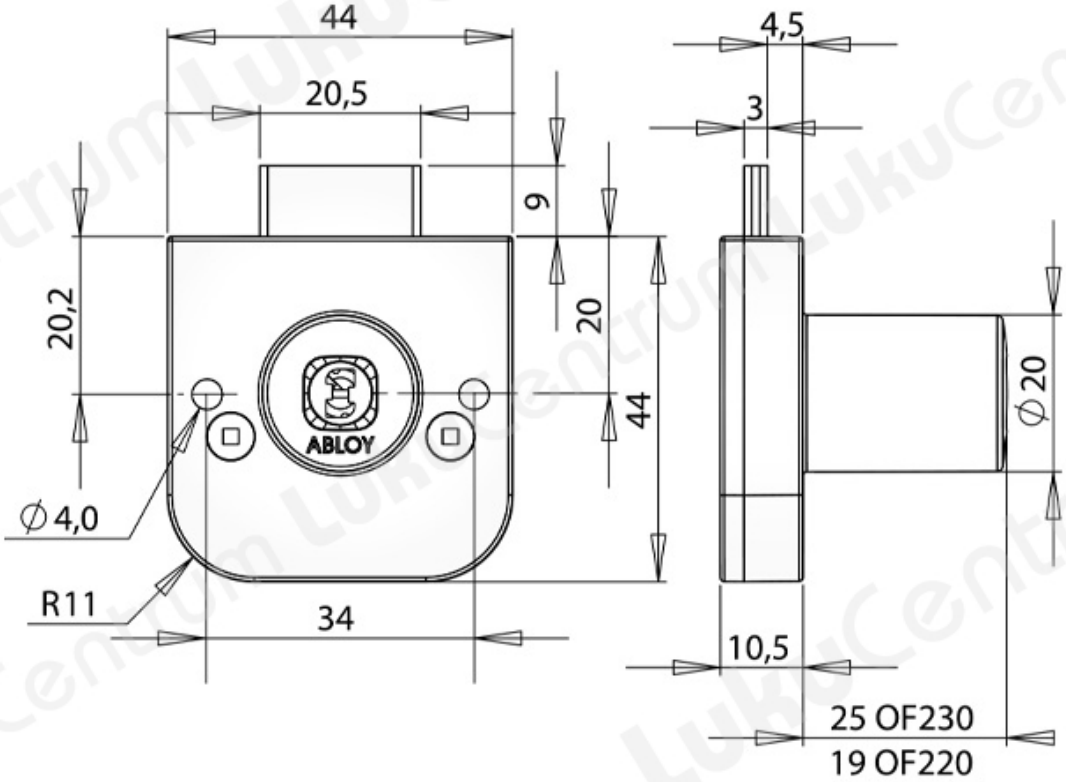TOOTENIMETUS	SOODUS	HIND
Cabinet lock ABLOY OF220C Classic (w 2 keys)		48.30 ?
Cabinet lock ABLOY OF220C Classic (w/o keys)		43.52 ?
Cabinet lock ABLOY OF220B Sentry (w 2 keys)		67.99 ?