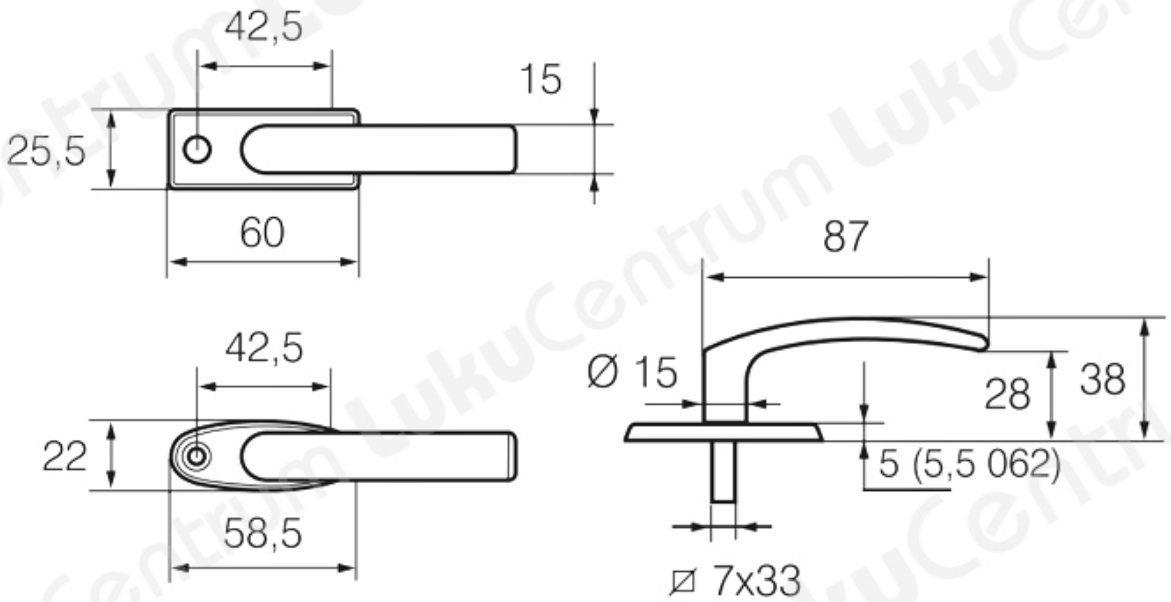TOOTENIMETUS	SOODUS	HIND
Ð?ÐºÐ¾Ð½Ð½Ð°Ñ• Ñ?Ñ?Ñ?ÐºÐ° ABLOY WF56/062 Zn/CR (Ð±Ð»ÐµÑ•Ñ?Ñ•Ñ?Ð¸Ð¹ Ñ Ñ?Ð¾Ð¼, 40 Ð¼Ð¼, Ð±ÐµÐ· Ð²Ð¸Ð½Ñ?Ð¾Ð²)		9.35 ?
Ð?ÐºÐ¾Ð½Ð½Ð°Ñ• Ñ?Ñ?Ñ?ÐºÐ° ABLOY WF56/062 Zn/VAL (Ð±ÐµÐ»Ñ?Ð¹ RAL 9010, 40 Ð¼Ð¼, Ð±ÐµÐ· Ð²Ð¸Ð½Ñ?Ð¾Ð²)		10.56 ?
Ð?ÐºÐ¾Ð½Ð½Ð°Ñ• Ñ?Ñ?Ñ?ÐºÐ° ABLOY WF56/062 Zn/CR (Ð±Ð»ÐµÑ•Ñ?Ñ•Ñ?Ð¸Ð¹ Ñ Ñ?Ð¾Ð¼, 40 Ð¼Ð¼)		10.83 ?
Ð?ÐºÐ¾Ð½Ð½Ð°Ñ• Ñ?Ñ?Ñ?ÐºÐ° ABLOY WF56/062 Zn/VAL (Ð±ÐµÐ»Ñ?Ð¹ RAL 9010, 40 Ð¼Ð¼)		10.85 ?